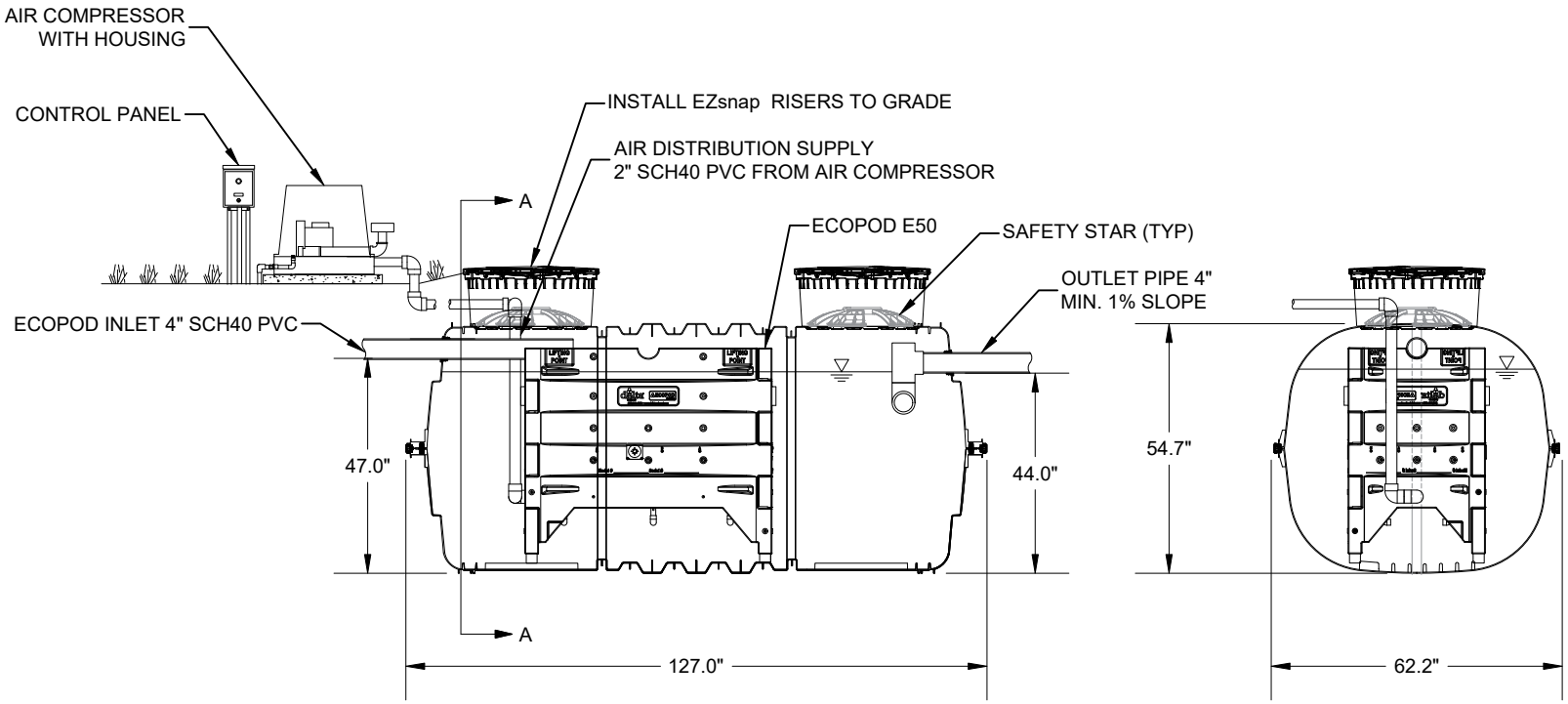

CROSS SECTION

SECTION A - A

TABLE 1: ELECTRICAL REQUIREMENTS

TREATMENT PLANT	E50N
COMPRESSOR	Delta Model 06
MOTOR FULL LOAD AMPS	4.8
MEASURED OPERATING WATTS	373
ELECTRICAL REQUIREMENTS	115 volt- single phase

TABLE 2: ECOPOD SPECIFICATIONS

TREATMENT PLANT	E50N
TREATMENT CAPACITY (GPD)	500
MIN. PRIMARY TANK VOLUME (GAL.)	500
REACTOR TANK VOLUME (GAL.)	710
MEDIA SIZE	4' X 2' X 2'
AIR REQUIREMENTS	12 CFM

NOTES

1. INSTALL TANK PER PRECASTER INSTRUCTIONS.
2. IF PRECAST DIMENSIONS ARE OUTSIDE THE MINUMUM DIMENSIONS, CONTACT DELTA FOR REVIEW.
3. FOR DESIGNS WITH TREATMENT CAPACITIES GREATER THAN 1,500 GPD, CONTACT DELTA FOR REVIEW.
4. OPTIONAL SCHEDULE 40 PVC INSERT INSTALLED TO RAISE ECOPOD TO INLET AND OUTLET HEIGHT REQUIREMENTS.

NO.	DATE	INITIALS
A	04/25/22	E.Alv
B	2/15/22	KJ

delta treatment systems
An Infiltrator Water Technologies Company

Delta Treatment Systems, LLC

COPYRIGHT (C) 2021 DELTA TREATMENT SYSTEMS, LLC (DTS). INFORMATION CONTAINED HEREIN IS CONFIDENTIAL AND IS THE PROPERTY OF DTS. NO PART OF THIS DRAWING SHALL BE REPRODUCED, DISTRIBUTED, DISCLOSED, OR USED BY ANY PERSON OR ORGANIZATION, IN WHOLE OR IN PART, WITHOUT THE PRIOR WRITTEN PERMISSION OF DTS. THIS INFORMATION IS BASED ON SPECIFIC INPUT PARAMETERS AND IS FOR BUDGETARY OR PRELIMINARY USE ONLY. USE AND INTERPRETATION OF THIS INFORMATION AND DETERMINING THE APPLICABILITY TO A SPECIFIC PROJECT IS AT THE SOLE DISCRETION OF THE USER AND/OR THE ENGINEER OF RECORD.

DELTA ECOPOD E50-NIM
INFILTRATOR IM-1060 SEPTIC TANK

GENERAL ARRANGEMENT

HORIZ. SCALE	PROJECT NO.
N.T.S.	P/N
VERT. SCALE	DATE
N/A	11/17/2021
DRAWN BY	DESIGNED BY
CGK	AOB
DRAWING NO.	SHEET NO.
C0.1	01 of 01

O:\Technical Resources New\02-IS_PRODUCTS\25. Delta Products\2022 Drawings\completed ECOPOD in IM-series\ECOPOD E50-NIM in IM-1060\ECOPOD E50-NIM in IM-1060_v2000.dwg